INTERWORKING BETWEEN WIRELESS LAN AND CELLULAR NETWORKS

Timo Smura
Helsinki University of Technology
Networking Laboratory
P.O. Box 3000 FIN-02015 HUT, FINLAND
Tel. +358-50-536 9855, Fax +358-9-451 2474
timo.smura@hut.fi

Abstract

An increasing number of public WLAN hotspots are being deployed in locations such as hotels, airports, and cafes around the world. Also mobile operators have found public WLAN services to be complementary to their other service offerings, providing a possible source of new revenues. The emergence of WLAN-enabled handsets will further increase the demand for these services.

Mobile operators are in a good position in the public WLAN market. They have a large customer base and existing systems for authentication, billing, and roaming. Reusing the existing systems and subscriber relationships requires interworking between the WLAN and cellular systems. This paper gives an overview of the technical WLAN interworking architecture that is currently being developed in 3GPP.

Key Words

WLAN, 3GPP, interworking, IEEE 802.11

Introduction

During the past few years, Wireless Local Area Networks (WLANs) have become increasingly popular in offices and homes, as well as in certain public places. The success of the technology results largely from the emergence of the IEEE 802.11 family of standards. Mass production of standardized chipsets has lowered the prices of WLAN equipment to a level suitable for most consumers and business users.

Public WLANs provide wireless connectivity in places where there is demand for high-speed data services. The most lucrative places for public WLAN deployments have been those where many people carrying laptops have extra time to use the services. These so-called hotspots include e.g. airports, hotels, conference centers, and cafes. The target end-user group for the services has been mainly business users.

When WLAN hotspots started to emerge in early 2000s, a question arose whether or not WLANs would threaten the businesses of mobile operators. This "WLAN vs. 3G" debate has been active from time to time, but the consensus seems to be settling to the view that the two technologies are complementary rather than competitive with each other. WLANs are usually seen as the technology of choice for providing high-speed data services for portable devices in locations densely crowded by business users. 3G networks, on the other hands, are set to serve mobile users in wider areas.

In the future, operators are likely to utilize a number of different radio access technologies in their networks. In Europe, the 3GPP (3rd Generation Partnership Project) has developed specifications for mobile networks, covering radio access technologies as well as core network and service related aspects. In addition, a number of other standards bodies and organizations are developing wireless technologies that can be used to provide wireless access to Internet services. In a future mobile networking environment, the end user devices might have WLAN, Bluetooth, and DVB-H interfaces in addition to multiple interfaces to mobile networks (e.g. GPRS, EDGE, and WCDMA).

This kind of heterogeneous network environment is often described as the next generation of mobile networking, i.e. "4G" or "beyond 3G". Intelligence in the networks and terminals is expected to allow the end-users to be "always best connected" [1], giving them the ability to at any point in time get IP connectivity to a certain point on the Internet over the access network or networks that best suits their current needs.

Interworking between WLAN and cellular networks is the first step towards these beyond 3G scenarios. The purpose of this paper is to introduce results from the related standardization work of 3GPP. The paper is structured as follows. In the first section, a brief introduction to WLAN networks and services is given. Next, the interworking model, scenarios, and architectures are introduced, as specified in 3GPP. Implications of WLAN-cellular interworking to mobile operators are then discussed, and the final section concludes the paper.

1 WLAN networks and services

As the name implies, WLAN networks are intended to provide wireless network connectivity in local areas, e.g. inside offices and homes. WLANs have traditionally been used as an extension or replacement to private wired LANs, although they have found also other applications, public hotspot networks being one of those.

1.1 IEEE 802.11 standards

A vast majority of WLANs deployed by far are based on the standards developed by the 802.11 working group [2]. The first 802.11 standard was ready in 1997, and since then several amendments have been published.

The IEEE 802 working groups develop standards for the lowest two layers of the Open Systems Interconnection (OSI) reference model, namely the physical (PHY) and the data link control (DLC) layers. The DLC layer is further split into a logical link control (LLC) layer and a medium access control layer (MAC). Each working group, including 802.11 working group for wireless LANs, develops specifications for the physical (PHY) layer and the medium access control (MAC) layer, which fit under a logical link control (LLC) layer common to all 802 standards. As technologies advance, new PHY layer specifications are constantly developed. The MAC layer specification is usually common for all PHY layers specified in one working group.

The WLAN products currently found in the market are based on one of three physical layer specifications: 802.11b, 802.11g, or 802.11a. 802.11b-based products are the most popular, providing data rates of 11 Mbps and operating in the 2.4 GHz unlicensed ISM (Industry, Science, Medical) band. 802.11g products use the same frequency band and provide data rates of 54 Mbps. 802.11a-based products operate in the 5 GHz frequency bands and provide data rates similar to the 802.11g. Features of different PHY layers are shown in Table 1.

Table 1: Key features of IEEE 802.11 PHY layers

Standard	**802.11a**	**802.11b**	**802.11g**
Frequency Band	5 GHz	2.4 GHz	2.4 GHz
Spectrum available	455 MHz	83.5 MHz	83.5 MHz
Channel Width	~18 MHz	~22 MHz	~22 MHz
Channel Spacing	20 MHz	5 MHz	5 MHz
Independent Channels	18	3 / 4	3 / 4
Range	Lower	Higher	Higher
Radio	OFDM	DSSS	DSSS / OFDM
Max. Data Rate	54 Mbps	11 Mbps	54 Mbps
Compatibility	NO		YES
Status	Available	Dominant	Available

The 802.11 MAC layer specification is based on a contention-based CSMA (Carrier Sense Multiple Access) access method. The quality of service features of the MAC layer are quite poor, and e.g. prioritization of traffic flows is not possible. Furthermore, the security features of the original MAC are flawed. Fortunately, enhancements to both the QoS and security have been and will be introduced in amendment standards 802.11e and 802.11i, respectively.

1.2 Hotspot network architecture

As discussed, public WLAN networks are usually deployed in so-called hotspots, i.e. locations densely crowded by business users carrying their laptops. The hotspot networks have many different kinds of architectures, depending on the needs of the operators and on the equipment used in the networks. The basic functionalities are, however, similar in all WLAN systems. Figure 1 shows a typical WLAN hotspot network architecture, based on [3].

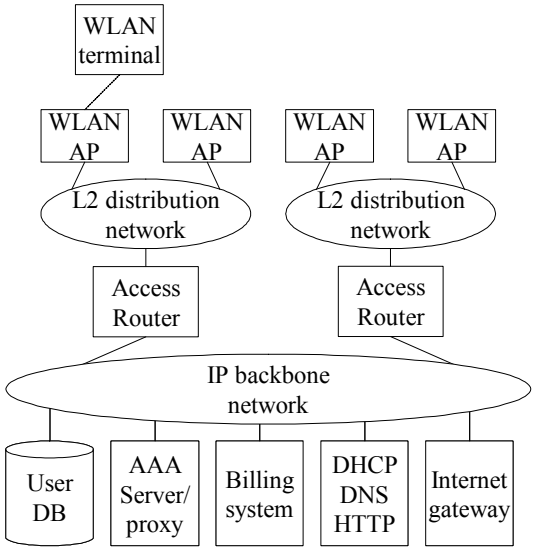

Figure 1: Hotspot network architecture

The core of the network architecture is the IP backbone. Servers connected to the backbone provide basic IP connectivity services and possibly some local content and application services. The WLAN terminal can be e.g. a laptop or a PDA (Personal Digital Assistant) equipped with an 802.11 adapter. The WLAN access point (AP) is a layer 2 bridge between 802.11 and Ethernet networks, and may also act as a RADIUS client towards the AAA (Authentication, Authorization, and Accounting) server.

An AAA server is typically a RADIUS server used to authenticate the hotspot visitors. In legacy systems,

authentication is based on using a web browser redirects. When the user starts a browser, its request is redirected to a local HTTP server that prompts the user to enter login name and password. The password can be static or time-limited, and it may be purchased e.g. as a scratch card from the hotspot location or via SMS. [3]

1.3 WLAN services and user equipment

Public WLAN services are typically used with laptop computers equipped with WLAN adapters. The adapter can be an add-on PC card or USB dongle, or integrated to the laptop. For the laptop users, the primary service is high-speed access to the Internet and VPN connectivity to corporate Intranets. E-mail and file transfers are also important applications for the business users.

In the future, WLAN adapters will be integrated also to mobile phones and PDAs. The recent launch of the new Nokia 9500 Communicator phone [4] can be seen as a landmark in the evolution of WLAN end-user devices. In addition to tri-band GSM capabilities, it has support for GPRS and EDGE as well as Bluetooth and 802.11b wireless connections. These kind of multimode devices are likely to increase their share of the mobile device market in the near future.

Services to be used with WLAN-enabled mobile devices may differ from the ones used with laptop computers. E-mail and access to Internet and Intranets will remain important, but the WLAN connection can also be used to access mobile operator specific services such as multimedia messaging or presence and location based services. Compared to laptops, WLAN-enabled mobile devices can be used in a wider range of locations and with less hassle.

The evolution towards WLAN-enabled mobile devices acts as a driver for interworking between WLAN and cellular networks. Synergies can be found from using unified access control and charging methods for both accesses. Benefits of interworking between the systems have been recognized also in standardization bodies, of which 3GPP is the most important from the point of view of European actors.

2 3GPP-WLAN interworking

2.1 Interworking model

3GPP began its WLAN related work in 2001. In the first stage, it carried out a feasibility study on interworking between 3GPP systems and WLANs [5]. The term 3GPP-WLAN interworking was used to refer to the utilization of resources and access to services within the 3GPP system by a WLAN UE (User Equipment) and user. Thus, an interworking WLAN becomes effectively a complementary radio access technology to the 3GPP system. The 3GPP-WLAN interworking model is shown in Figure 2.

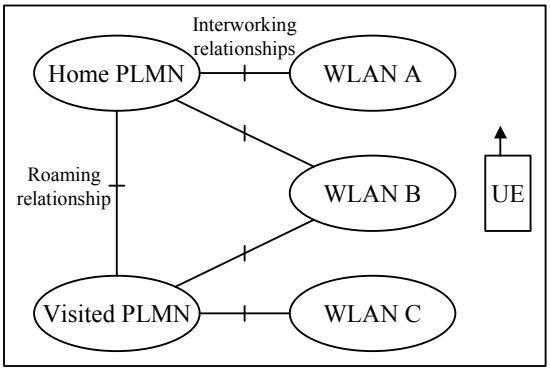

Figure 2: 3GPP-WLAN interworking model [5]

As shown in Figure 1, interworking relationships may exist between a number of PLMNs (Public Land Mobile Networks) and WLANs. From the user perspective, WLAN A and WLAN B are home WLAN networks, whereas WLAN C is a visited WLAN.

2.2 Interworking scenarios

In the feasibility study [5], six different interworking scenarios were identified, ranging from common billing to the provision of services seamlessly between 3GPP systems and WLANs. The scenarios are introduced in Table 2.

Table 2: 3GPP-WLAN interworking scenarios [5]

Scenario	Description
1: Common billing and customer care	The customer receives one bill from the mobile operator for the usage of both 3GPP and WLAN services. Customer care is also integrated.
2: 3GPP system based access control and charging	Authentication, authorization, and accounting are provided by the 3GPP system.
3: Access to 3GPP system PS based services	3GPP system PS based services are extended to the WLAN. The services may include e.g. APNs, IMS based services, location based services, instant messaging, presence based services, MBMS, and combinations of these.
4: Service continuity	The services supported in Scenario 3 are made to survive a change of access between WLAN and 3GPP systems. The change of access may be noticeable to the user, but there will be no need to re-establish the service.
5: Seamless services	Service continuity is made seamless, i.e. aspects such as data loss and break time during the switch between access technologies are minimized.
6: Access to 3GPP CS services	Access is allowed to services provided by the 3GPP CS core network entities over WLAN interface.

Of the six scenarios, the first one does not require any changes in the 3GPP specifications. System description for scenarios 2 and 3 has been specified in [6], and these scenarios will be included in the 3GPP Release 6 that is to be frozen in late 2004. Scenarios 4 and 5 will be included in Release 7. The last scenario will most probably not be included in 3GPP specifications, as the demand for such functionality is very low.

3 Interworking architecture

3.1 Tight and loose interworking

Before 3GPP had any WLAN-related activities, interworking between cellular and WLAN systems had already been studied by the ETSI BRAN (Broadband Radio Access Networks) project in 2001 [7]. Two fundamentally different ways of solving the interworking were then introduced, entitled loose interworking and tight interworking.

In the tight interworking, the WLAN network is connected to the rest of the cellular core network in the same manner as other radio access technologies (i.e. UTRAN and GERAN), using an interface similar to the Iu interface. In this way, the mechanisms for mobility, quality of service, and security of the core network can be reused. An example of a tight interworking architecture is shown in Figure 3.

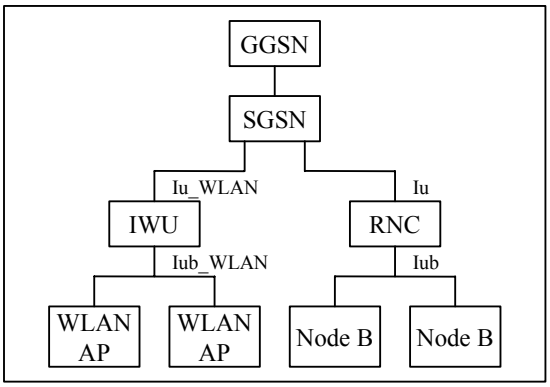

Figure 3: Tight interworking architecture [7]

In the loose interworking, the WLAN is a complementary access network to the cellular core networks, utilizing the subscriber databases but without any Iu type interface, i.e. avoiding the SGSN and GGSN nodes. The operator will be able to utilize the same subscriber database for both cellular and WLAN users, allowing centralized billing and maintenance for different access technologies. Only IP services are supported across the access network, and security, mobility, and QoS need to be addressed using IETF protocols. The 3GPP-WLAN interworking architecture is based on the loose interworking model.

3.2 3GPP-WLAN interworking architecture

The 3GPP-WLAN interworking architecture is specified in [6]. The architecture covers functionalities required for scenarios 2 and 3 as described earlier in Table 2. The interworking architecture is illustrated in Figure 4, which shows a roaming case where a user is connected to a WLAN access network administered by a visited operator.

As shown in Figure 4, the interworking architecture introduces a number of new network elements to the 3GPP system. These include WLAN User Equipment (UE), 3GPP Authentication, Authorization, and Accounting (AAA) server and proxy, WLAN Access Gateway (WAG), and Packet Data Gateway (PDG).

The WLAN UE is a WLAN radio terminal equipped with a smart card with SIM/USIM applications. The UE may be e.g. a mobile phone, laptop, or PDA, and it may or may not have a 3GPP radio interface in addition to the WLAN interface. The UE may also be functionally split over several physical devices communicating over local interfaces such as Bluetooth, infra-red, or serial cable interface. In this case, one device holds the smart card while another device provides the WLAN access.

The 3GPP AAA server is located within the 3GPP home network. It retrieves information from the HLR (Home Location Register) or HSS (Home Subscriber Server), and authenticates the users based on the information. Furthermore, it communicates authorization information to the WLAN and to the PDG and generates and reports charging and accounting information to the CGw (Charging Gateway) or CCF (Charging Control Function) of the home PLMN.

The 3GPP AAA proxy resides in the 3GPP visited network and relays the AAA information between WLAN and the 3GPP AAA server. It also reports charging and accounting information to the visited PLMN CGw/CCF and enforces policies derived from roaming agreements between operators. Furthermore, the AAA proxy handles authorization of access to services provided by the visited operator.

WAG and PDG are required for scenario 3 functionalities, i.e. access to 3GPP system PS based services. The WAG is a gateway via which the data is routed between the WLAN access network and the PDG. It resides in the visited PLMN in the roaming case and in the home PLMN in the non-roaming case.

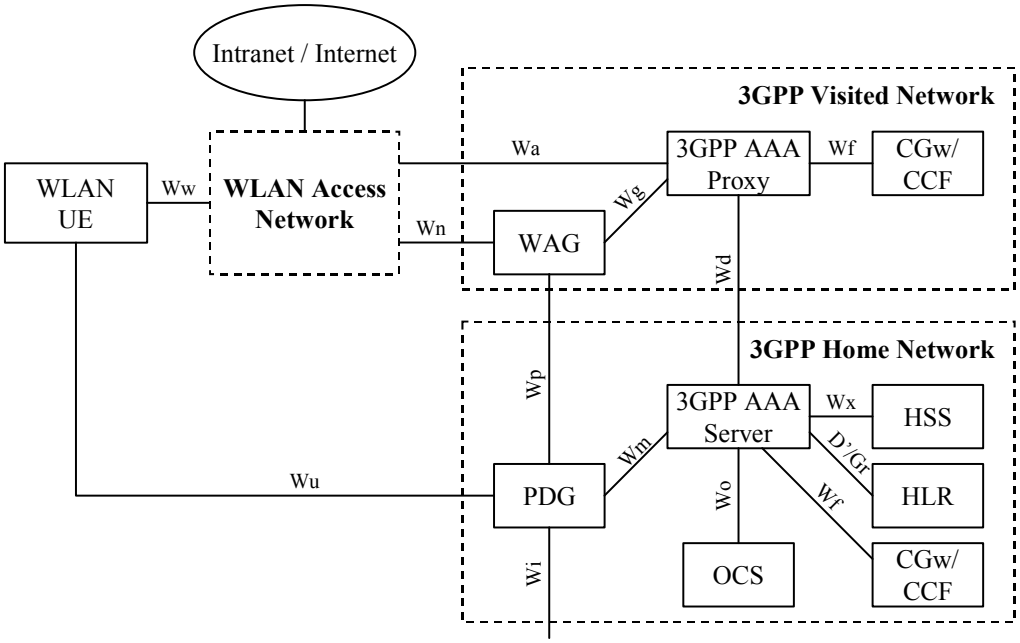

Figure 4: 3GPP-WLAN interworking architecture and interfaces [4]

The WAG may also generate charging and accounting information and perform traffic filtering.

The 3GPP PS based services are always accessed via a PDG. Services may be accessed via a PDG either in the home network or in a visited network. The PDG acts as an endpoint for the tunneled user data and acts as a gateway to remote IP networks. In that sense it is analogous to the GGSN in GPRS networks. [6]

3.3 Interfaces and protocols

The 3GPP-WLAN interworking architecture defines a number of new interfaces (i.e. reference points) between the network elements, as shown in Figure 4. These interfaces are mainly based on IETF specified protocols. Only the interface between the 3GPP AAA server and HLR (D'/Gr) uses GSM/GPRS network specific protocols.

Figure 5a shows the authentication protocol stacks used in the case of interworking between a WLAN and GSM network. The SIM authentication method is implemented as an Extensible Authentication Protocol (EAP) type called EAP/SIM [8]. The WLAN UE implements IEEE 802.1x authentication, in which the EAP packets are encapsulated in EAPOL (EAP over LAN) frames. The WLAN access network includes a RADIUS client that passes the EAP packets through to the AAA network. The 3GPP AAA server is a RADIUS server implementing the EAP/SIM authentication method peer. It also includes the Mobile Application Part (MAP) protocol stack to obtain authentication triplets and authorization information from the HLR through a SS7 network.

In the case of 3G networks, the authentication method will be EAP/AKA [9]. Also, the 3GPP AAA server will interface with a HSS rather than a HLR. RADIUS protocol will also be replaced by DIAMETER in the future.

Figure 5b shows the protocol stacks for transmission of user data between the WLAN UE and the PDG. The remote IP layer is used by the WLAN UE to be addressed in the external packet data networks. The tunneling layer allows end-to-end tunneling between a WLAN UE and a PDG. The transport IP layer is used by the intermediate entities and networks to transport the encapsulated remote IP layer packets.

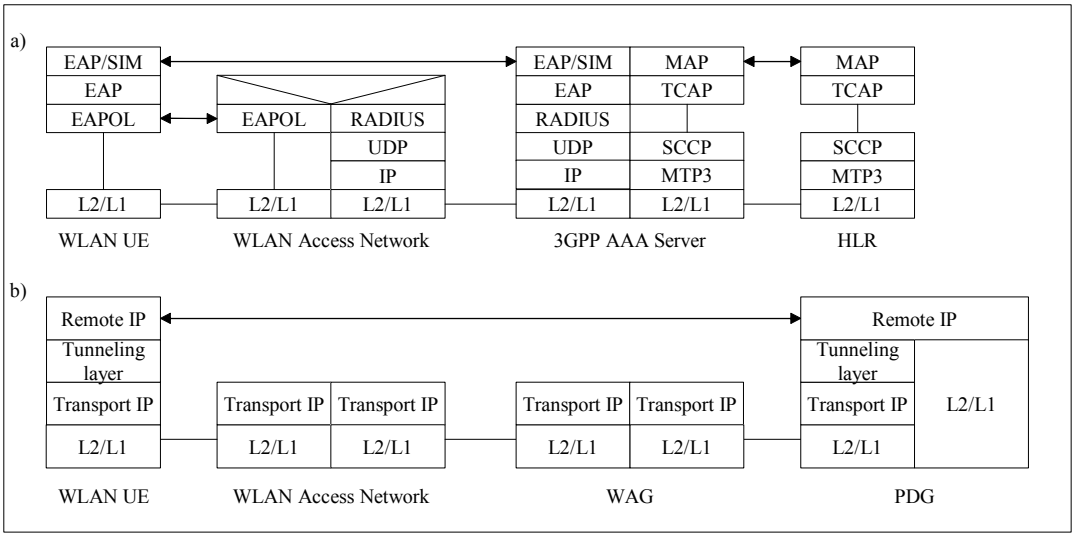

Figure 5: Protocol stacks between a) WLAN UE and HLR, and b) WLAN UE and PDG [5,12, 23.234, Haverinen]

4 Implications to mobile operators

4.1 Interworking vs. separate networks

Mobile operators are in a good position in the public WLAN market. They have a large customer base and existing systems for authentication, billing, and roaming. Reusing these existing systems and subscriber relationships requires the access control and charging in WLAN systems to be based on the SIM/USIM cards.

WLANs have been proposed as an alternative access technology for mobile operators since late 1990s. Many operators have also launched public WLAN services, but very few are using e.g. SIM-based user authentication. The majority of public WLAN networks are still based on browser-based authentication methods.

SIM/USIM-based authentication requires a smart card reader in the end-user terminal, which is often difficult or cumbersome to use. Even more importantly, a majority of the existing base of WLAN hotspots and end-user devices does not have support for IEEE 802.1x that is required to carry the EAP-SIM authentication data over the WLAN. Also, the requirement to provide separate SIM/USIM cards for WLAN usage may turn some operators away to legacy authentication mechanisms.

In the future, however, the interworking architecture specified by 3GPP is likely to gain more support among WLAN hotspot providers. In WLAN-enabled mobile phones the SIM/USIM cards are already in place, and the end users are likely to prefer authentication mechanisms in which no user intervention is required. The future vision of seamless services in heterogeneous networks also highlights the importance of unified authentication, authorization, and accounting mechanisms.

4.2 Competitive or complementary?

Although cellular and WLAN networks are nowadays usually treated as complementary rather than competitive to one another, some questions still arise. For example, if user-configurable WLAN becomes a common feature in mobile handsets, are the operator revenues really likely to rise?

WLAN hotspot services are currently targeted to business users with laptops. Thus, the substitute service is either high-speed cellular data or fixed Ethernet-based services in e.g. hotels and airports. When targeting these users, WLAN really seems to be complementing the cellular services.

The emergence of WLAN-enabled mobile handsets may, however, change the situation. The usage patterns of private and public WLANs will become different from the laptop era, as the devices are likely to be carried in the pockets of their owners, always ready to be taken into use for even short periods of time.

Currently, people in offices and homes tend to use their mobile phones for communication, even if less expensive fixed telephone connections were available. Voice over WLAN (VoWLAN) enabled handsets have gained a lot of publicity an hype recently, and they could provide end-users with means to bypass the mobile networks. As WLAN networks become more and more popular in homes and offices, and multimode WLAN-cellular handsets become sufficiently intelligent to automatically prefer available WLAN networks over

cellular, the mobile operators may face some serious difficulties.

Quality of service, security, and ease-of-use are factors still defending the mobile operator's position. In order to provide these, and to differentiate from smaller WLAN operators, mobile operators have to move towards tighter interworking between WLAN and cellular networks.

Based on this discussion, it can be stated that *if* mobile operators decide to provide public WLAN services, they should make the WLAN system an integral part of their whole infrastructure using available interworking technologies. The question of whether or not to provide WLAN services in the first place is left for further study.

5 Conclusion

The paper discussed interworking issues between WLAN and cellular networks. Interworking provides means for mobile operators to leverage their existing customer base and roaming agreements, as well as authentication and billing systems.

3GPP has specified a technical interworking architecture between cellular and WLAN systems. In the first phase, the architecture covers functionalities required for 3GPP system based access control and charging, as well as access to 3GPP system PS based services. In the future, the standardization efforts will move toward service continuity and seamless services between network technologies.

References

[1] Gustafsson, E. & Jonsson, A., 2003. Always Best Connected. IEEE Wireless Communications, February 2003.

[2] IEEE 802.11 Working Group. Web pages. Available at: http://www.ieee802.org/11/

[3] Ahmavaara, K., Haverinen, H. & Pichna, R., 2003. Interworking Architecture Between 3GPP and WLAN Systems. IEEE Communications Magazine, November 2003.

[4] Nokia, 2004. "Nokia launches new enterprise-class Communicator". Press release. February 23, 2004.

[5] 3GPP, Technical Specification Group Services and System Aspects; Feasibility study on 3GPP system to Wireless Local Area Network (WLAN) interworking (Release 6), TR 22.934 v6.2.0, September 2003.

[6] 3GPP, Technical Specification Group Services and System Aspects; 3GPP system to Wireless Local Area Network (WLAN) Interworking; System Description (Release 6), TS 23.234 V6.0.0, March 2004.

[7] ETSI TR 101 957, "Broadband Radio Access Networks (BRAN); HIPERLAN Type 2; Requirements and Architectures for Interworking between HIPERLAN/2 and 3rd Generation Cellular systems", V1.1.1, 2001-06.

[8] Haverinen, H. & Salowey, J., 2004. Extensible Authentication Protocol Method for GSM Subscriber Identity Modules (EAP-SIM). IETF draft-haverinen-pppext-eap-sim-13.txt, April 2004.

[9] Arkko, J. & Haverinen, H., 2003. EAP AKA Authentication. IETF draft-arkko-pppext-eap-aka-11.txt, October 2003.

[10] Haverinen, H., Mikkonen, J., & Takamäki, T., 2002. Cellular Access Control and Charging for Mobile Operator Wireless Local Area Networks. IEEE Wireless Communications, December 2002.